TECHSEM

Y30KSE

BI-DIRECTIONAL THYRISTOR

Features:

- Two anti-paralled thyristors on one Si-wafer
- Hermetic metal cases with ceramic insulators
- Capsule packages for doubble sided cooling

Typical Applications

- High power industrical and power transmissior
- DC and AC motor control
- AC controllers

$I_{T(RMS)}$	520A
V_{DRM}/V_{RRM}	500~1800V
I_{TSM}	5.0kA
I^2t	125 A^2s*10^3

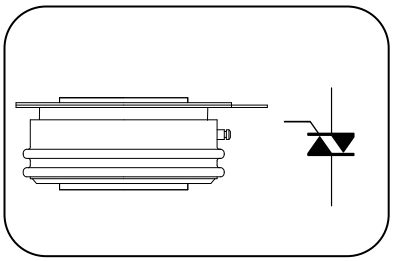

SYMBOL	CHARACTERISTIC	TEST CONDITIONS		T_j(°C)	VALUE			UNIT
					Min	Type	Max	
$I_{T(RMS)}$	RMS current	50Hz sine wave Double side cooled,	T_C=55°C	125			730	A
			T_C=85°C				520	
							300	
V_{DRM}	Repetitive peak reverse voltage	V_{DRM} tp=10ms V_{DSM} = V_{DRM} +100V		125	500		1800	V
I_{DRM}	Repetitive peak current	V_{DM}= V_{DRM}		125			30	mA
I_{TSM}	Surge on-state current	10ms half sine wave V_R=0.6V_{RRM}		125			5.0	kA
I^2t	I^2T for fusing coordination						125	A^2s*10^3
V_{TO}	Threshold voltage			125			0.85	V
r_T	On-state slop resistance						1.85	mΩ
V_{TM}	Peak on-state voltage	I_{TM}=450A, F=7.0kN		125			1.78	V
dv/dt	Critical rate of rise of off-state voltage	V_{DM}=0.67V_{DRM}		125			50	V/μs
di/dt	Critical rate of rise of on-state current	V_{DM}= 67%V_{DRM} to 800A, Gate pulse t_r ≤0.5μs I_{GM}=1.5A Repetitive		125			50	A/μs
I_{GT}	Gate trigger current	V_A=12V, I_A=1A		25	20		200	mA
V_{GT}	Gate trigger voltage				0.8		2.5	V
I_H	Holding current				20		200	mA
$R_{th(j-c)}$	Thermal resistance Junction to case	double side cooled Clamping force 7.0kN					0.045	°C /W
$R_{th(c-h)}$	Thermal resistance case to heat sink						0.010	
F_m	Mounting force				5.3		10	kN
T_{stg}	Stored temperature				-40		140	°C
W_t	Weight					80		g
Outline	KT25aT							
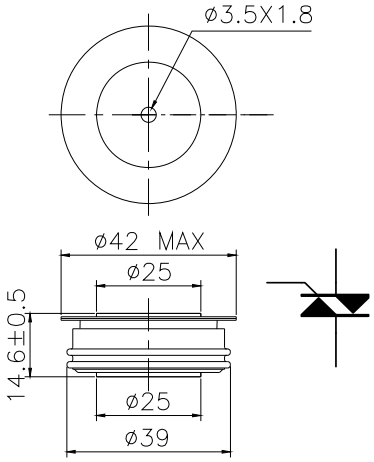
Outline: