TECHSEM

MFC600 MFA600 MFK600 MFX600
Thyristor/Diode Modules

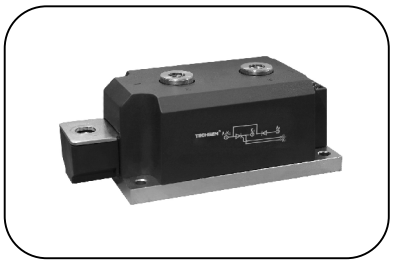

Features：

- Isolated mounting base 3000V~
- Pressure contact technology with Increased power cycling capability
- Space and weight saving

Typical Applications

- AC/DC Motor drives
- Various rectifiers
- DC supply for PWM inverter

V_{DSM},V_{RSM}	V_{DRM},V_{RRM}	Type & Outline
2100V 2300V 2600V	2000V 2200V 2500V	MFx600-20-408F3 MFx600-22-408F3 MFx600-25-408F3

SYMBOL	CHARACTERISTIC	TEST CONDITIONS	T_j(°C)	VALUE			UNIT
				Min	Type	Max	
$I_{T(AV)}$	Mean on-state current	180° half sine wave 50Hz Single side cooled, T_c=85°C	125			600	A
$I_{T(RMS)}$	RMS on-state current		125			942	A
I_{DRM} I_{RRM}	Repetitive peak current	at V_{DRM} at V_{RRM}	125			50	mA
I_{TSM}	Surge on-state current	10ms half sine wave V_R=60%V_{RRM}	125			16	KA
I^2t	I^2T for fusing coordination					1280	A^2s*10^3
V_{TO}	Threshold voltage		125			0.88	V
r_T	On-state slop resistance					0.24	mΩ
V_{TM}	Peak on-state voltage	I_{TM}=2400A	25			2.60	V
dv/dt	Critical rate of rise of off-state voltage	V_{DM}=67%V_{DRM}	125			800	V/μs
di/dt	Critical rate of rise of on-state current	**I_{TM} =600A,**Gate source 1.5A t_r≤0.5μs Repetitive	125			100	A/μs
I_{GT}	Gate trigger current	V_A=12V, I_A=1A	25	30		200	mA
V_{GT}	Gate trigger voltage			1.0		3.0	V
I_H	Holding current			20		200	mA
V_{GD}	Non-trigger gate voltage	V_{DM}=67%V_{DRM}	125	0.2			V
$R_{th(j-c)}$	Thermal resistance Junction to case	Single side cooled per chip				0.054	°C /W
$R_{th(c-h)}$	Thermal resistance case to heat sink	Single side cooled per chip				0.03	°C /W
V_{iso}	Isolation voltage	50Hz,R.M.S,t=1min,I_{iso}:1mA(MAX)		3000			V
F_m	Thermal connection torque (M10)				12.0		N·m
	Mounting torque (M6)				6.0		N·m
T_{stg}	Stored temperature			-40		125	°C
W_t	Weight				2230		g
Outline	408F3						

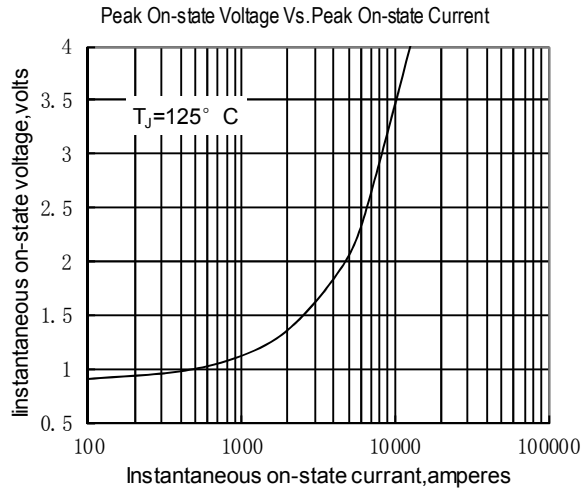

Fig.1

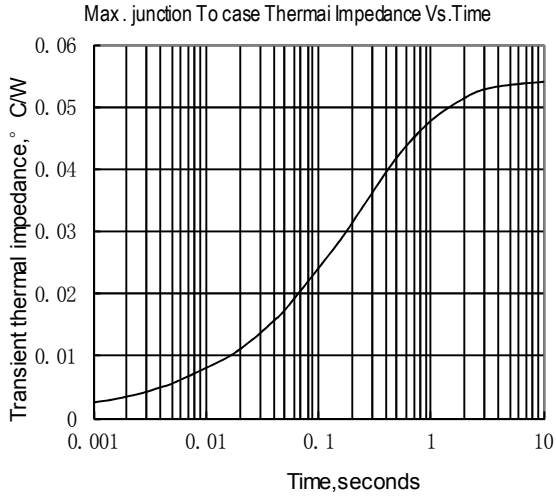

Fig.2

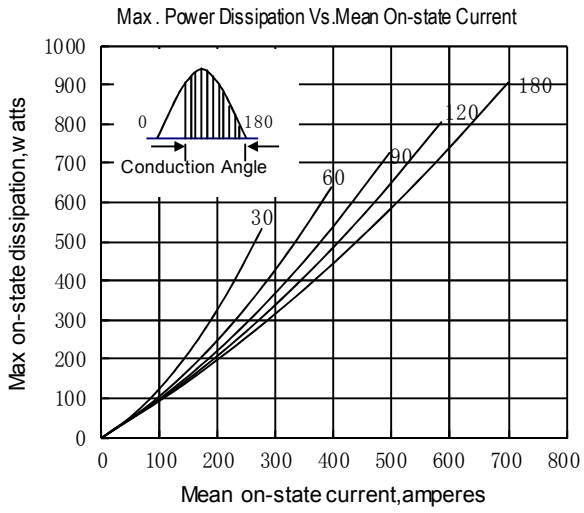

Fig.3

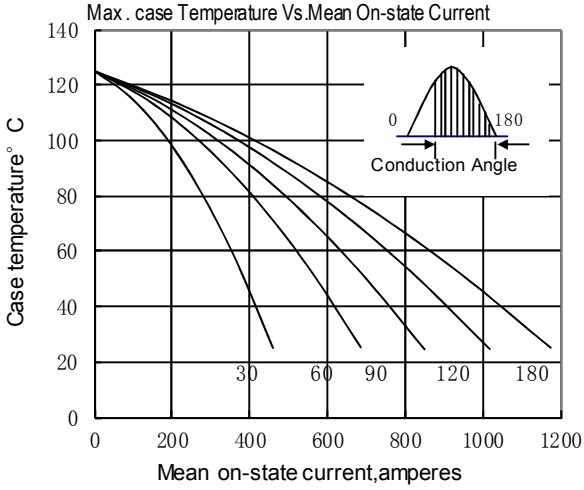

Fig.4

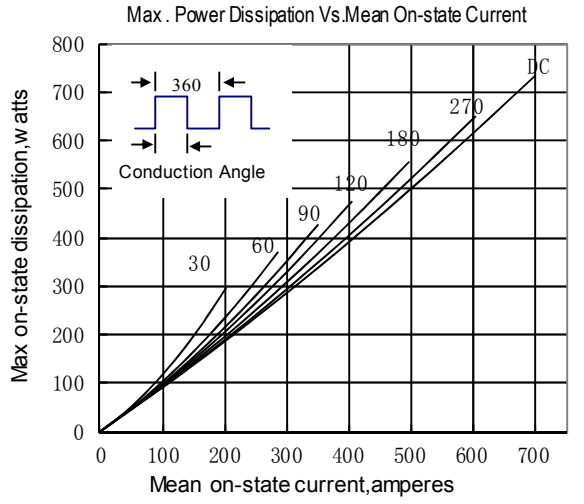

Fig.5

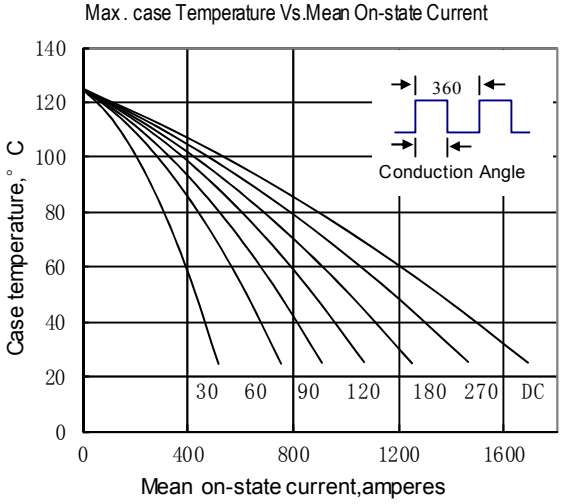

Fig.6

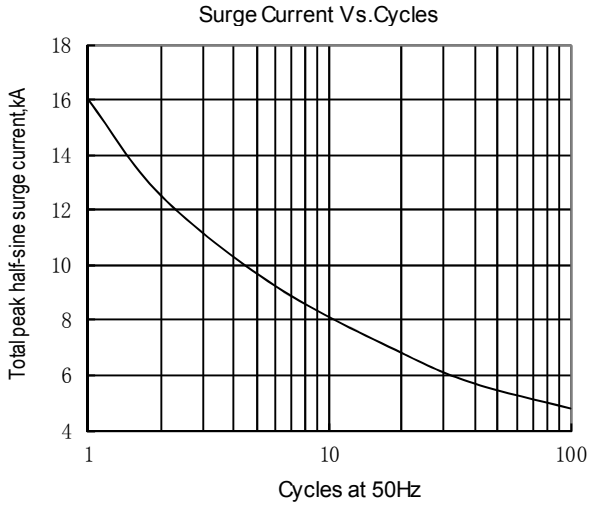

Fig.7

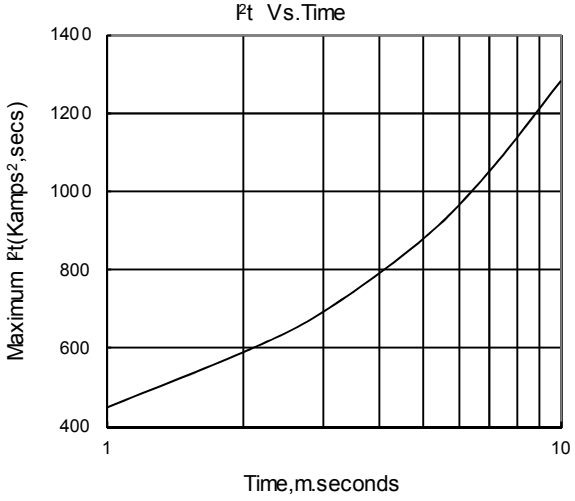

Fig.8

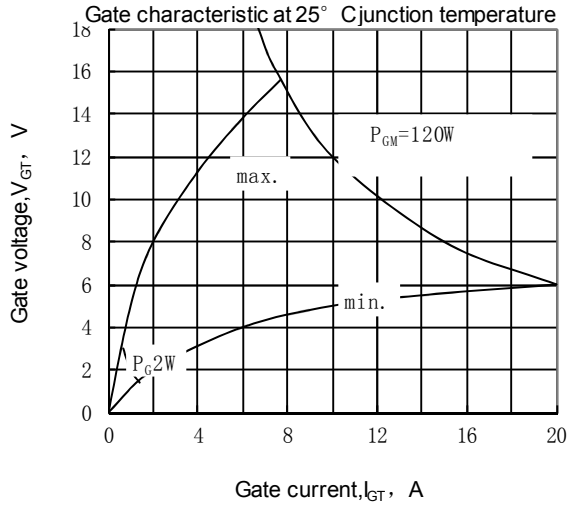

Fig.9

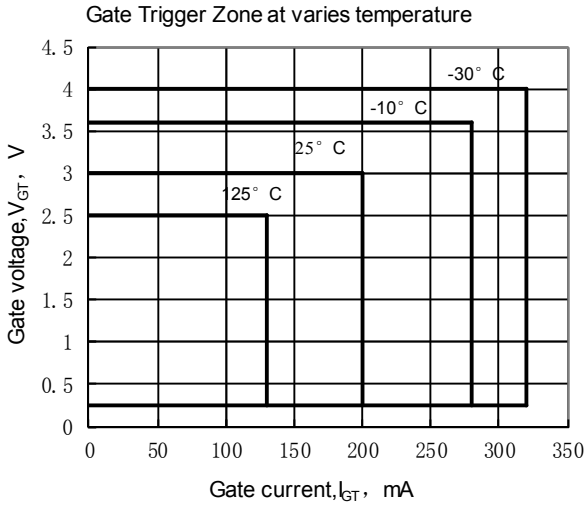

Fig.10

Outline:

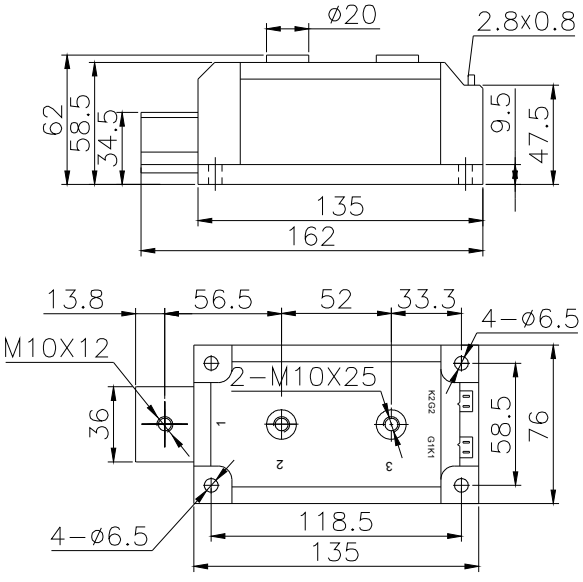
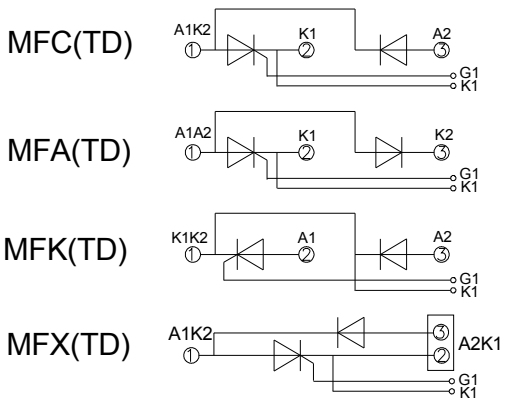
408F3