TECHSEM

MDC250 MDA250 MDK250 MD250
Diode Modules

Features：

- Isolated mounting base3000V~
- Pressure contact technology with Increased power cycling capability
- Space and weight saving

Typical Applications

- Various rectifiers
- DC supply for PWM inverter

V_{RSM}	V_{RRM}	Type & Outline
2100V	2000V	MDx250-20-413F3D
2300V	2200V	MDx250-22-413F3D
2600V	2500V	MDx250-25-413F3D

SYMBOL	CHARACTERISTIC	TEST CONDITIONS	T_j(°C)	VALUE			UNIT
				Min	Type	Max	
$I_{F(AV)}$	Mean forward current	180° half sine wave 50Hz Single side cooled, T_C=100°C	150			250	A
$I_{F(RMS)}$	RMS forward current		150			393	A
I_{RRM}	Repetitive peak current	at V_{RRM}	150			20	mA
I_{FSM}	Surge forward current	10ms half sine wave V_R=0.6V_{RRM}	150			9.0	kA
I^2t	I^2t for fusing coordination					405	A^2s*10^3
V_{FO}	Threshold voltage		150			0.85	V
r_F	Forward slope resistance					0.89	mΩ
V_{FM}	Peak forward voltage	I_{FM}=750A	25			1.53	V
$R_{th(j-c)}$	Thermal resistance Junction to case	At 180^0 sine, Single side cooled per chip				0.13	°C /W
$R_{th(c-h)}$	Thermal resistance case to heatsink	At 180^0 sine, Single side cooled per chip				0.04	°C /W
V_{iso}	Isolation voltage	50Hz,R.M.S,t=1min,I_{iso}:1mA(max)		3000			V
F_m	Terminal connection torque(M8)				12.0		N·m
	Mounting torque(M6)				6.0		N·m
T_{stg}	Stored temperature			-40		125	°C
W_t	Weight				810		g
Outline	413F3D						

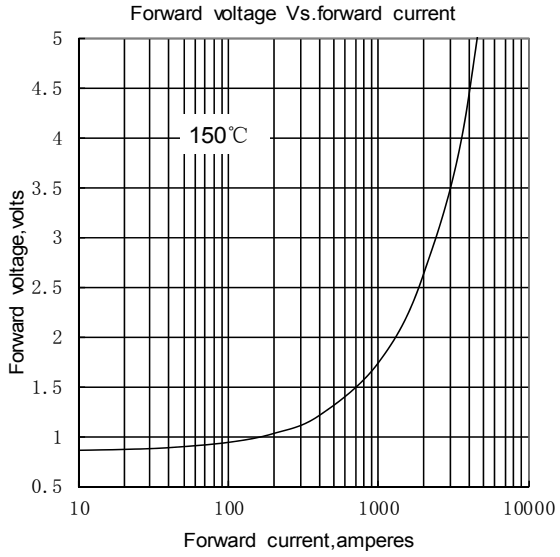

Fig.1

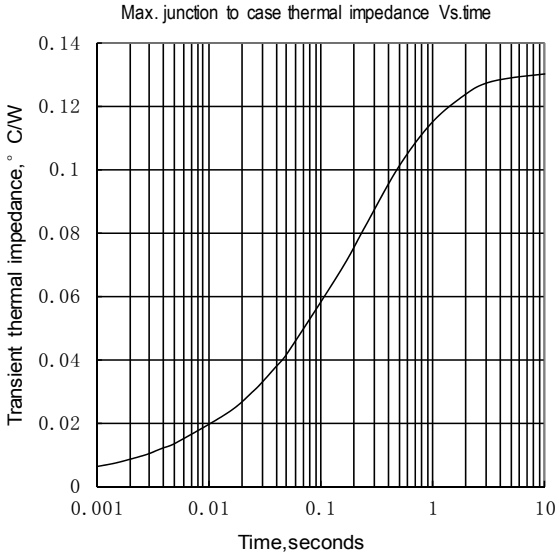

Fig.2

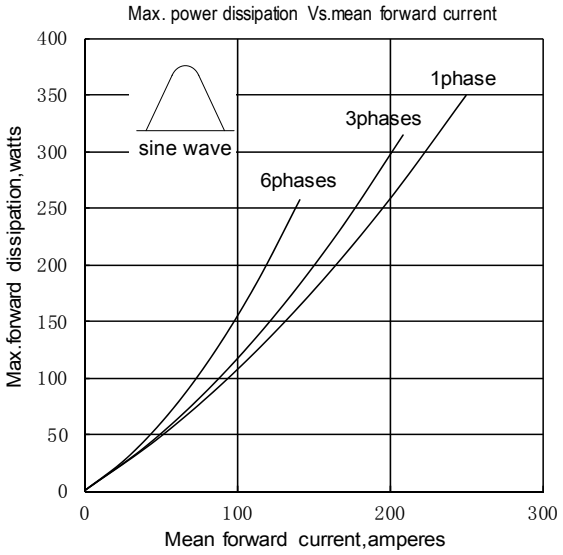

Fig.3

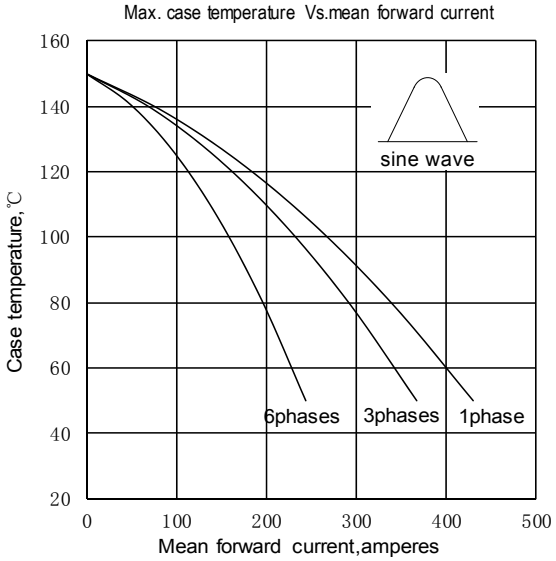

Fig.4

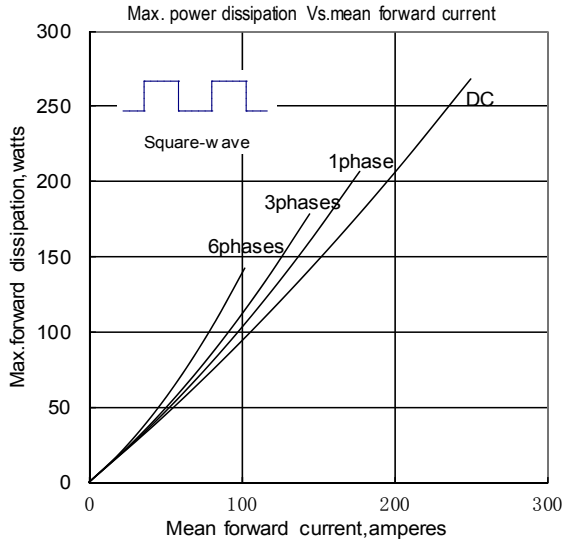

Fig.5

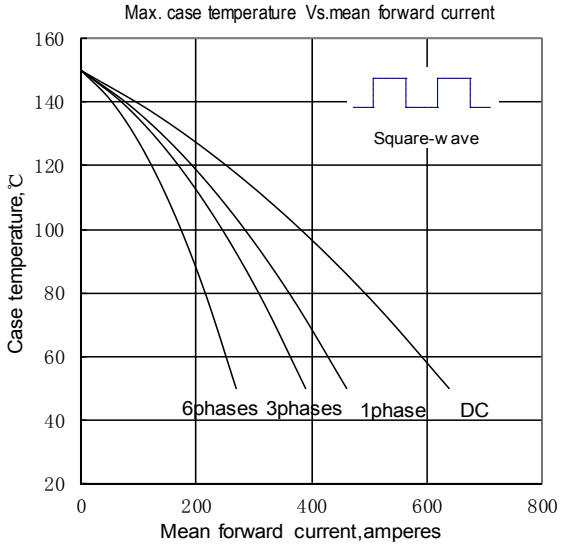

Fig.6

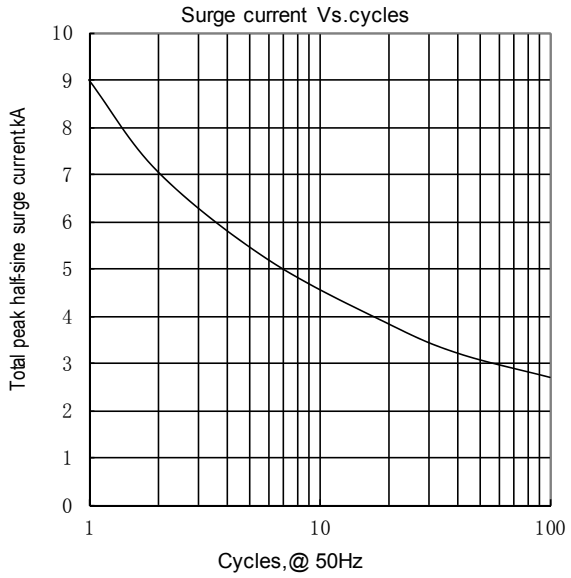

Fig.7

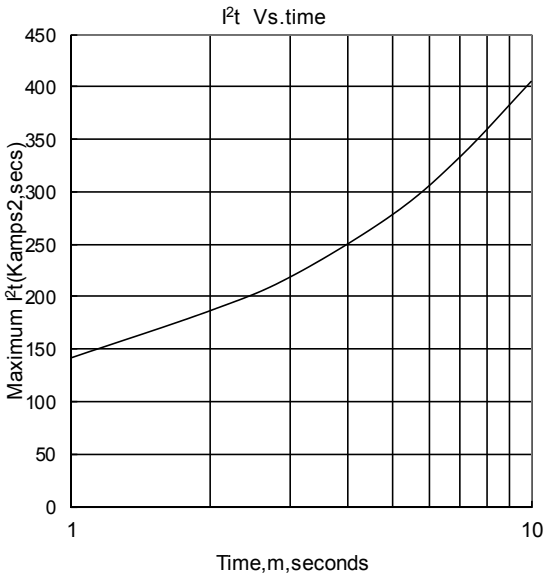

Fig.8
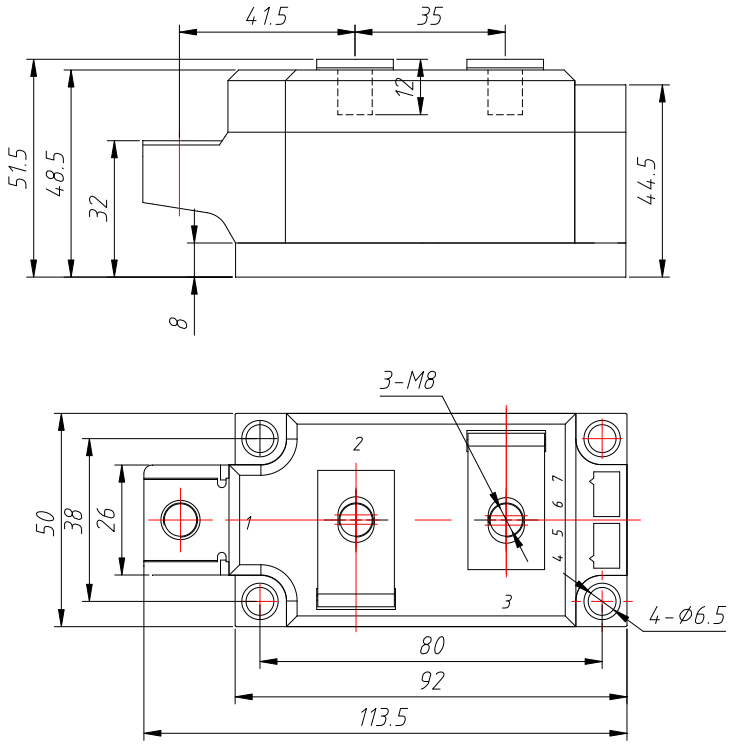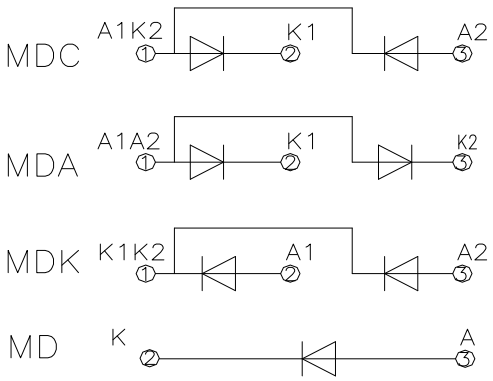
Outline: