TECHSEM

MTC1000 MTA1000 MTK1000 MTX1000 MT1000
Thyristor Modules

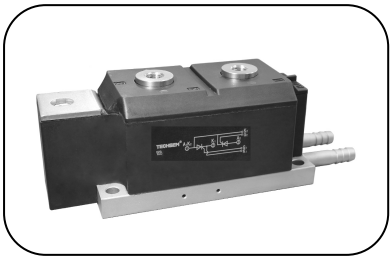

Features:

- Isolated mounting base 2500V~
- Pressure contact technology with Increased power cycling capability
- Space and weight saving

Typical Applications:

- AC/DC Motor drives
- Various rectifiers
- DC supply for PWM inverter

V_{DSM},V_{RSM}	V_{DRM},V_{RRM}	Type & Outline
900V	800V	MTx1000-08-411F3
1100V	1000V	MTx1000-10-411F3
1300V	1200V	MTx1000-12-411F3
1500V	1400V	MTx1000-14-411F3
1700V	1600V	MTx1000-16-411F3
1900V	1800V	MTx1000-18-411F3

SYMBOL	CHARACTERISTIC	TEST CONDITIONS	T_j(°C)	VALUE			UNIT
				Min	Type	Max	
$I_{T(AV)}$	Mean on-state current	180° half sine wave 50Hz Single side cooled,T_c=55°C	125			1000	A
$I_{T(RMS)}$	RMS on-state current					1570	A
I_{DRM} I_{RRM}	Repetitive peak current	at V_{DRM} at V_{RRM}	125			55	mA
I_{TSM}	Surge on-state current	10ms half sine wave, V_R=0.6V_{RRM}	125			26.0	kA
I^2t	I^2t for fusing coordination					3380	A^2s*10^3
V_{TO}	Threshold voltage		125			0.81	V
r_T	On-state slope resistance					0.21	mΩ
V_{TM}	Peak on-state voltage	I_{TM}=3000A	25			2.05	V
dv/dt	Critical rate of rise of off-state voltage	V_{DM}=67%V_{DRM}	125			800	V/μs
di/dt	Critical rate of rise of on-state current	Gate source 1.5A t_r≤0.5μs Repetitive	125			100	A/μs
I_{GT}	Gate trigger current	V_A=12V, I_A=1A	25	30		200	mA
V_{GT}	Gate trigger voltage			1.0		3.0	V
I_H	Holding current			20		200	mA
V_{GD}	Non-trigger gate voltage	V_{DM}=67%V_{DRM}	125	0.2			V
$R_{th(j-c)}$	Thermal resistance Junction to case	Single side cooled per chip				0.052	°C /W
$R_{th(c-h)}$	Thermal resistance case to heat sink	Single side cooled per chip				0.018	°C /W
V_{iso}	Isolation voltage	50Hz,R.M.S,t=1min,I_{iso}:1mA(MAX)		2500			V
F_m	Terminal connection torque(M12)				14.0		N·m
	Mounting torque(M8)				12.0		N·m
T_{vj}	Junction temperature			-40		125	°C
T_{stg}	Stored temperature			-40		125	°C
W_t	Weight				3460		g
Outline	411F3						

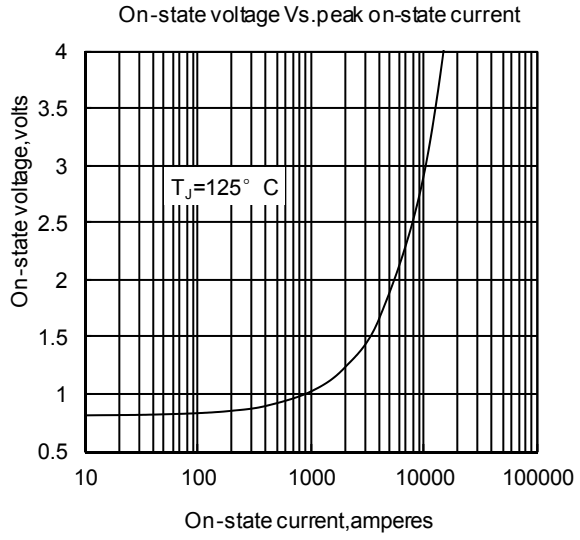

Fig1

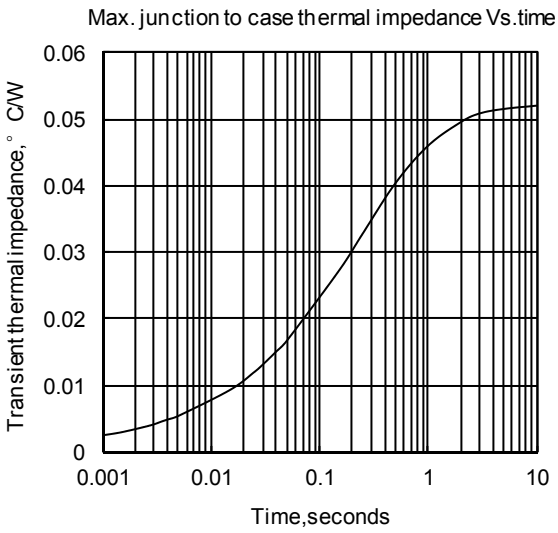

Fig2

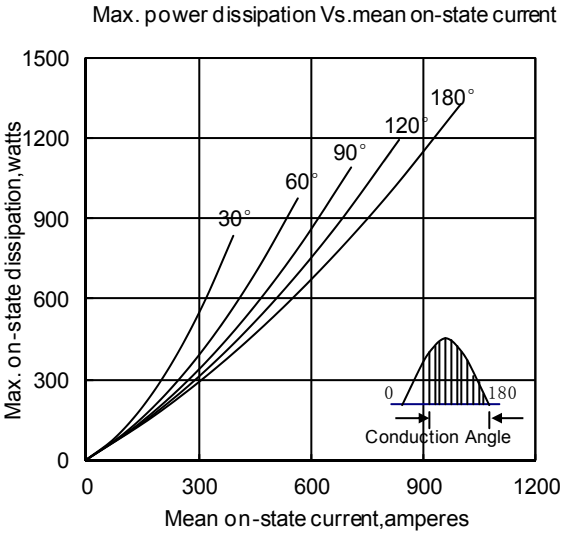

Fig3

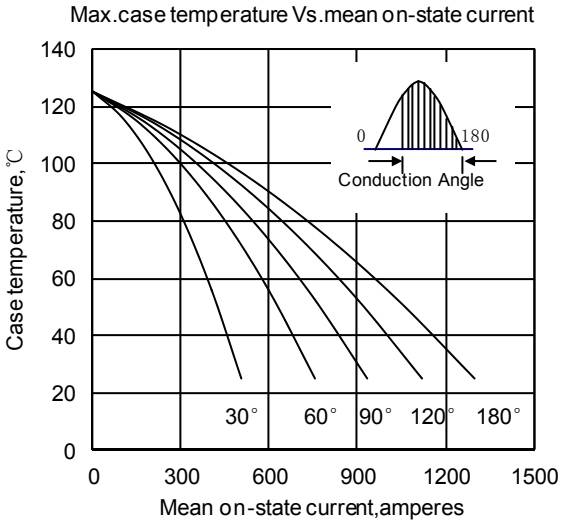

Fig4

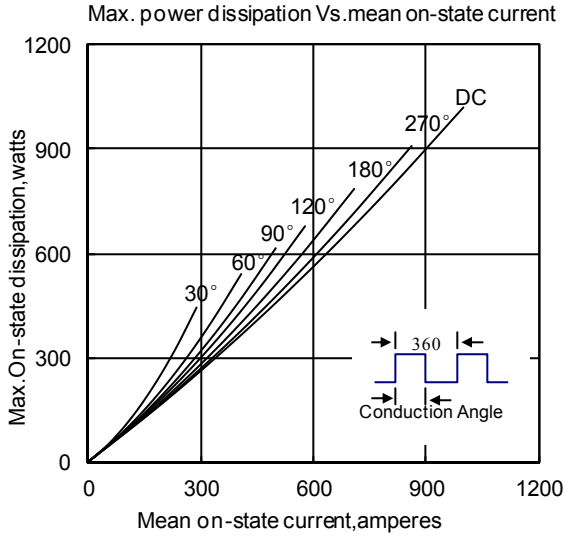

Fig5

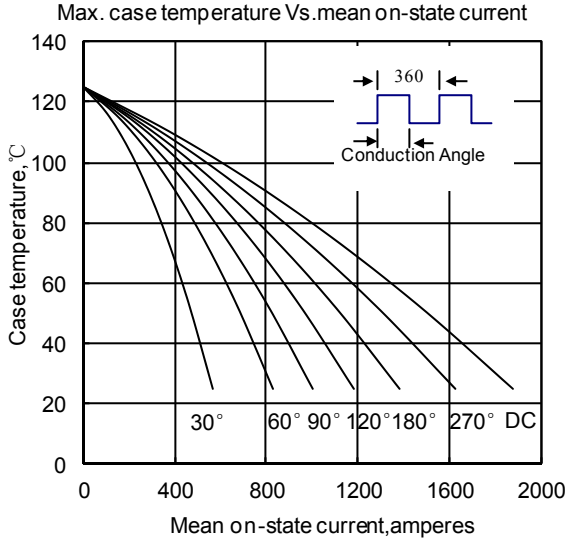

Fig6

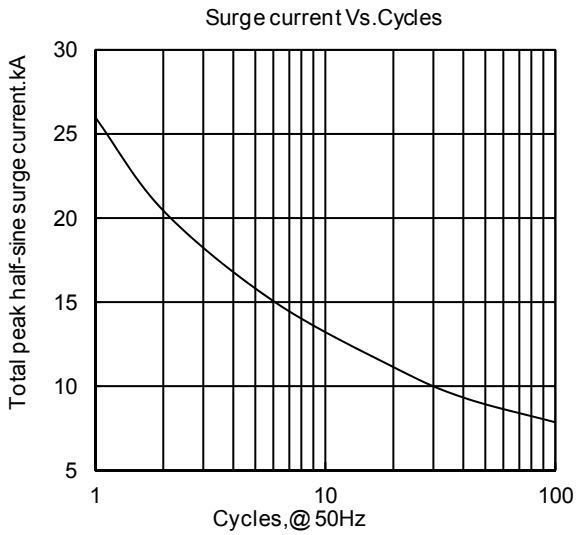

Fig7

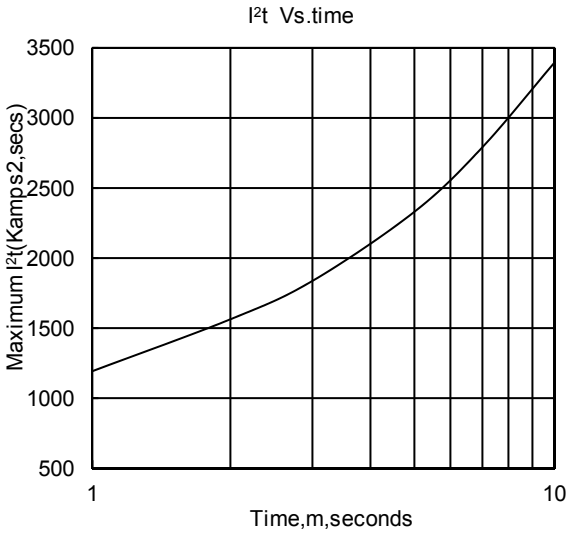

Fig8

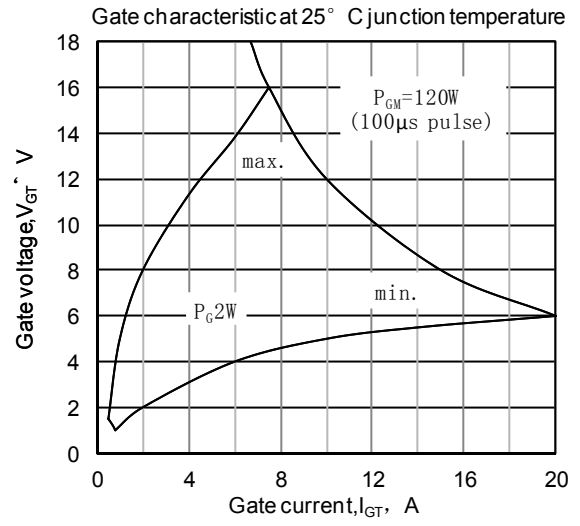

Fig9

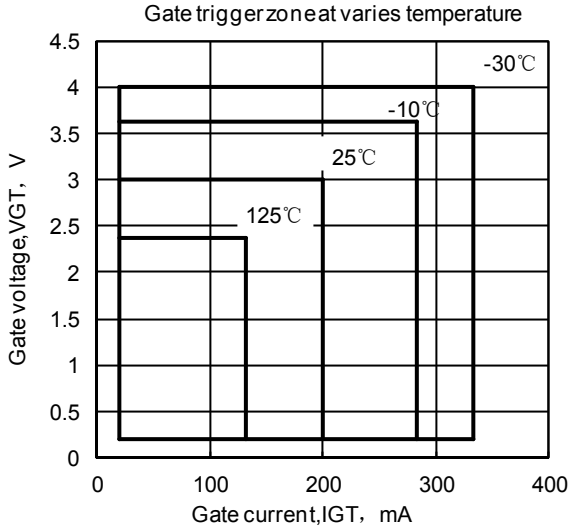

Fig10
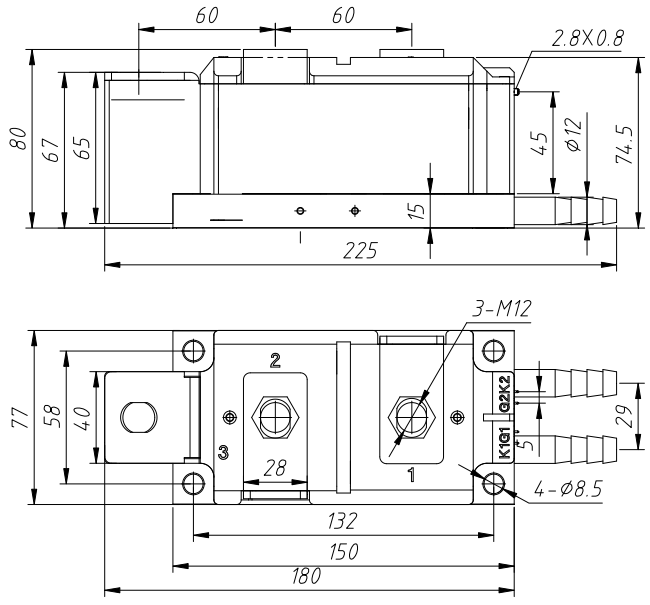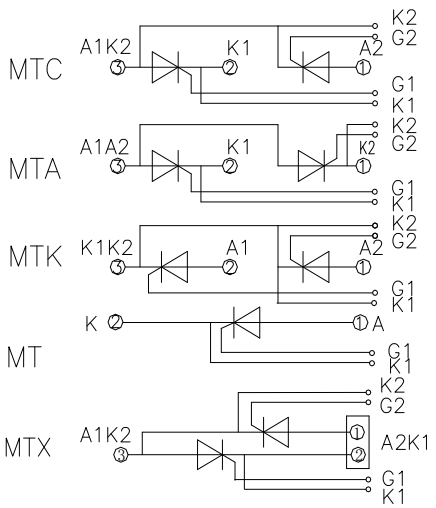
Outline: