TECHSEM

MTG300 MTY300
Thyristor Modules(Non-isolated Type)

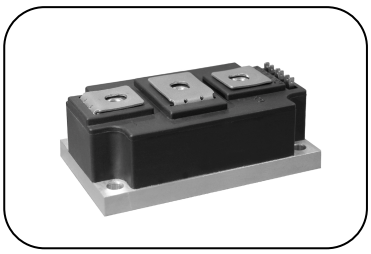

Features：

- Non-Isolated.Mounting base as anode or csthode terminal
- Pressure contact technology with Increased power cycling capability
- Low on-state voltage drop

Typical Applications

- Welding Power Supply
- Various DC Power supplies
- DC supply for PWM inverter

V_{DSM},V_{RSM}	V_{DRM},V_{RRM}	Type & Outline
900V	800V	MTx300-08-404F4
1100V	1000V	MTx300-10-404F4
1300V	1200V	MTx300-12-404F4
1500V	1400V	MTx300-14-404F4
1700V	1600V	MTx300-16-404F4
1900V	1800V	MTx300-18-404F4

SYMBOL	CHARACTERISTIC	TEST CONDITIONS	T_j(°C)	VALUE			UNIT
				Min	Type	Max	
$I_{T(AV)}$	Mean on-state current	180° half sine wave 50Hz Single side cooled, T_c=90°C	125			300	A
$I_{T(RMS)}$	RMS on-state current		125			471	A
I_{DRM} I_{RRM}	Repetitive peak current	at V_{DRM} at V_{RRM}	125			25	mA
I_{TSM}	Surge on-state current	10ms half sine wave V_R=60%V_{RRM}	125			8.3	KA
I^2t	I^2t for fusing coordination					344	A^2s*10^3
V_{TO}	Threshold voltage		125			0.80	V
r_T	On-state slope resistance					0.72	mΩ
V_{TM}	Peak on-state voltage	I_{TM}=900A	25			1.58	V
dv/dt	Critical rate of rise of off-state voltage	V_{DM}=67%V_{DRM}	125			800	V/μs
di/dt	Critical rate of rise of on-state current	Gate source 1.5A t_r ≤0.5μs Repetitive	125			100	A/μs
I_{GT}	Gate trigger current	V_A=12V, I_A=1A	25	30		150	mA
V_{GT}	Gate trigger voltage			1.0		2.5	V
I_H	Holding current			20		180	mA
V_{GD}	Non-trigger gate voltage	At 67%V_{DRM}	125	0.2			V
$R_{th(j-c)}$	Thermal resistance Junction to case	Single side cooled per chip				0.08	°C /W
$R_{th(c-h)}$	Thermal resistance case to heatsink	Single side cooled per chip				0.04	°C /W
F_m	Thermal connection torque(M8)				12.0		N·m
	Mounting torque(M6)				6.0		N·m
T_{stg}	Stored temperature			-40		125	°C
W_t	Weight				590		g
Outline	404F4						

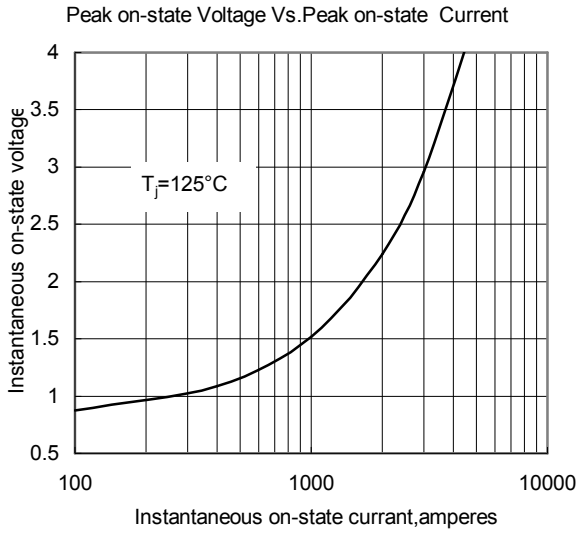

Fig.1

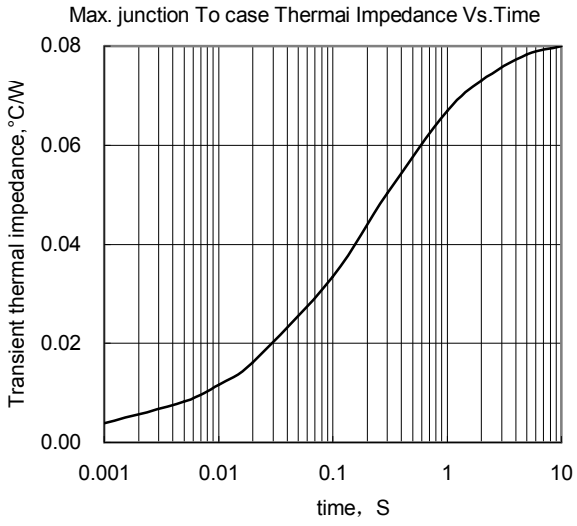

Fig.2

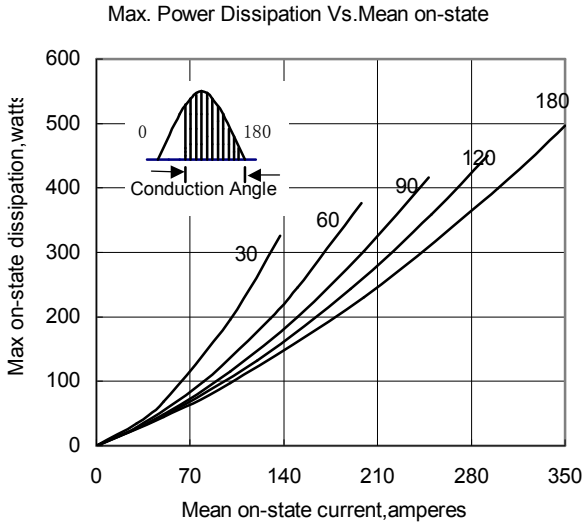

Fig.3

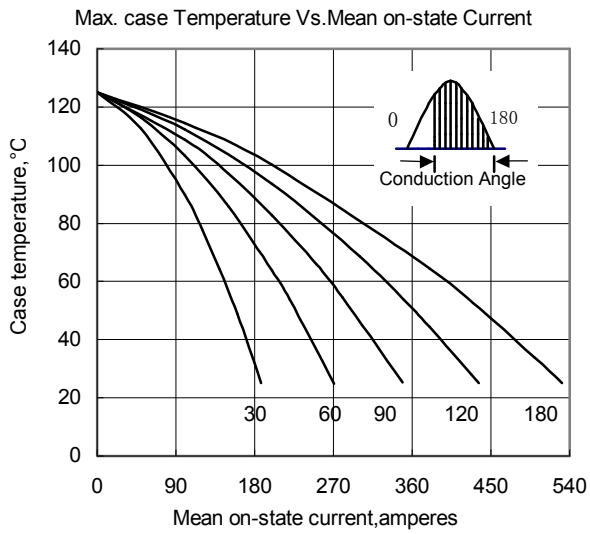

Fig.4

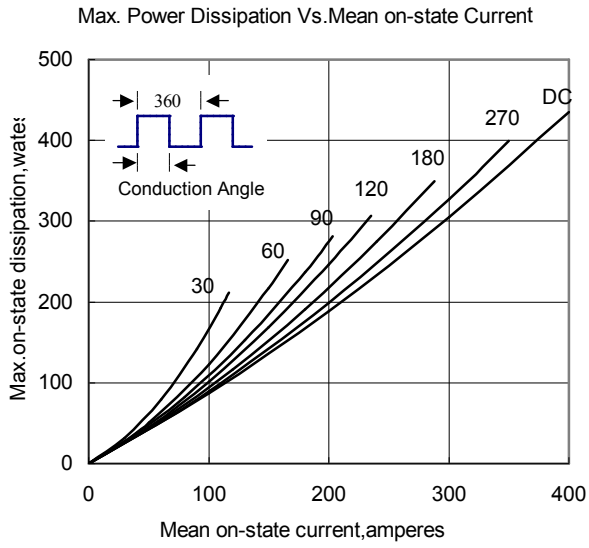

Fig.5

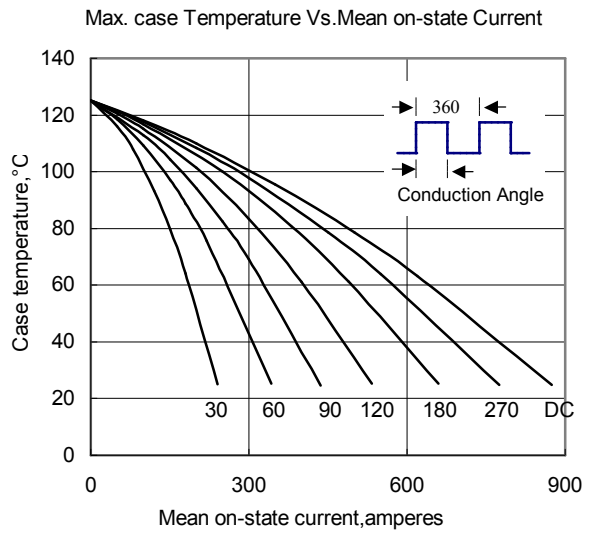

Fig.6

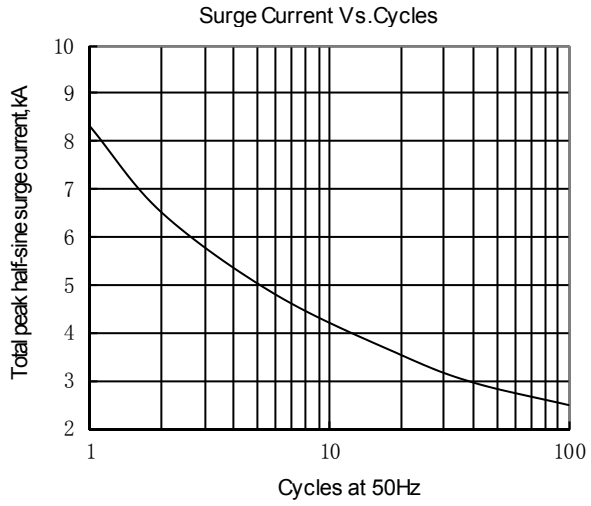

Fig.7

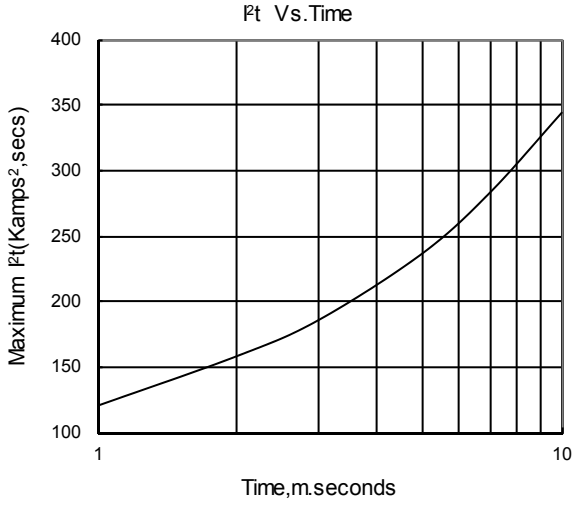

Fig.8

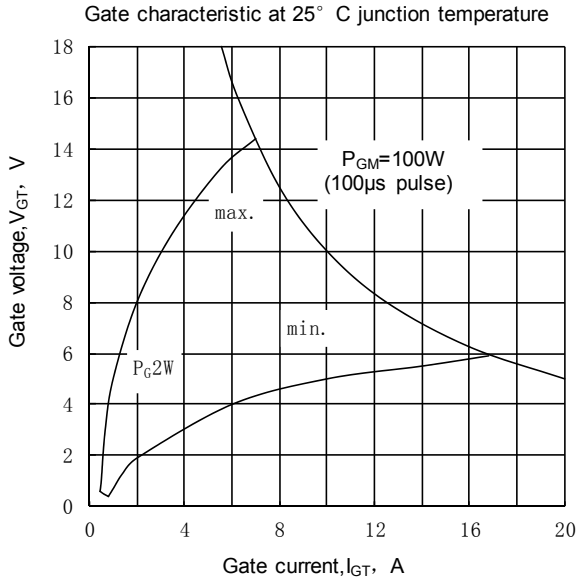

Fig.9

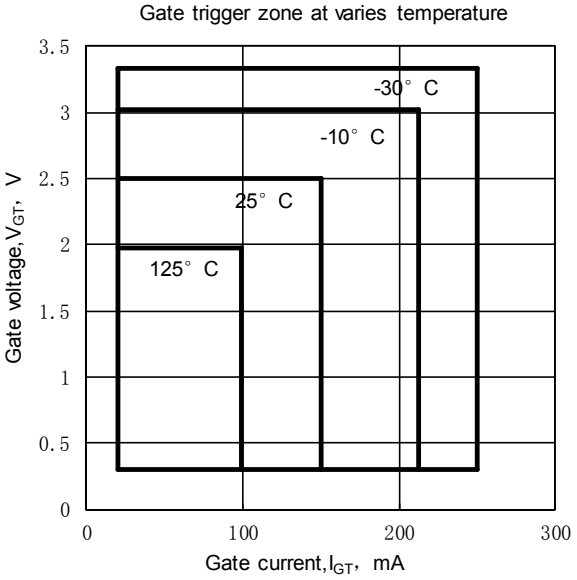

Fig.10

Outline:

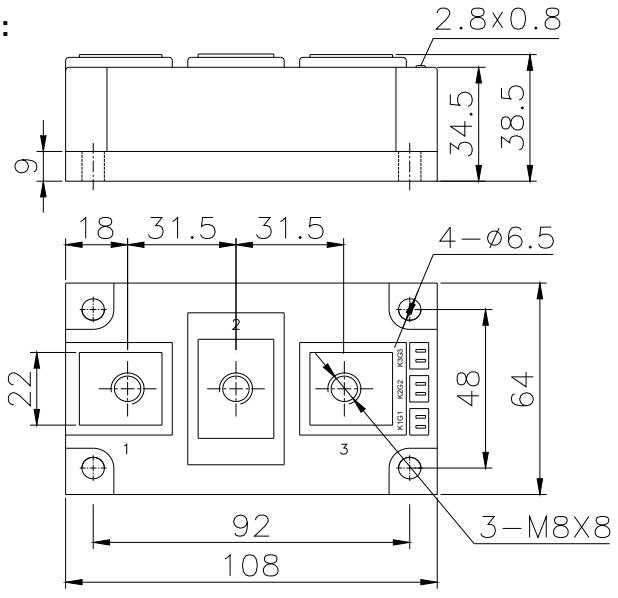

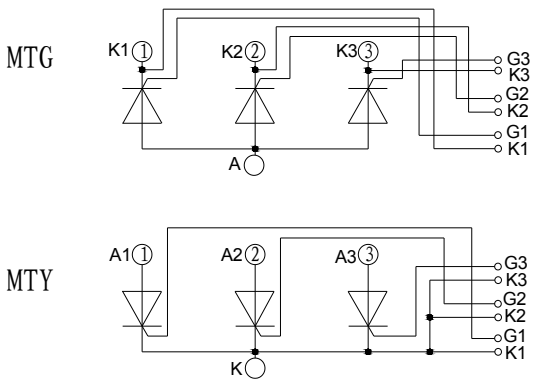

404F4