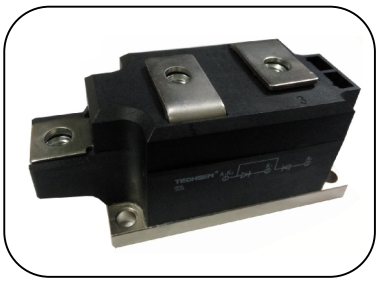

Features：

- Isolated mounting base 3000V~
- Pressure contact technology with Increased power cycling capability
- Space and weight saving

Typical Applications

- Various rectifiers
- DC supply for PWM inverter

V_{RRM}	Type & Outline
800V	MDx250-08-413F3D
1000V	MDx250-10-413F3D
1250V	MDx250-12-413F3D
1400V	MDx250-14-413F3D
1600V	MDx250-16-413F3D
1800V	MDx250-18-413F3D
1800V	MD250-18-413F3DG

MDx stands for any type of **MDC, MDA, MDK**

SYMBOL	CHARACTERISTIC	TEST CONDITIONS	T_j(°C)	VALUE			UNIT
				Min	Type	Max	
$I_{F(AV)}$	Mean forward current	180° half sine wave 50Hz Single side cooled, T_C=100°C	150			250	A
$I_{F(RMS)}$	RMS forward current					393	A
I_{RRM}	Repetitive peak current	at V_{RRM}	150			20	mA
I_{FSM}	Surge forward current	V_R=60%V_{RRM},t=10ms half sine,	150			8.5	kA
I^2t	I^2t for fusing coordination					361	10^3A^2s
V_{FO}	Threshold voltage		150			0.75	V
r_F	Forward slope resistance					0.76	mΩ
V_{FM}	Peak forward voltage	I_{FM}=750A	25			1.35	V
$R_{th(j-c)}$	Thermal resistance Junction to case	Single side cooled per chip				0.14	°C/W
$R_{th(c-h)}$	Thermal resistance case to heatsink	Single side cooled per chip				0.04	°C/W
V_{iso}	Isolation voltage	50Hz,R.M.S,t=1min,I_{iso}:1mA(MAX)		3000			V
F_m	Terminal connection torque(M8)			10		12	N·m
	Mounting torque(M6)			4.5		6	N·m
T_{vj}	Junction temperature			-40		150	°C
T_{stg}	Stored temperature			-40		125	°C
W_t	Weight				770		g
Outline	413F3D						

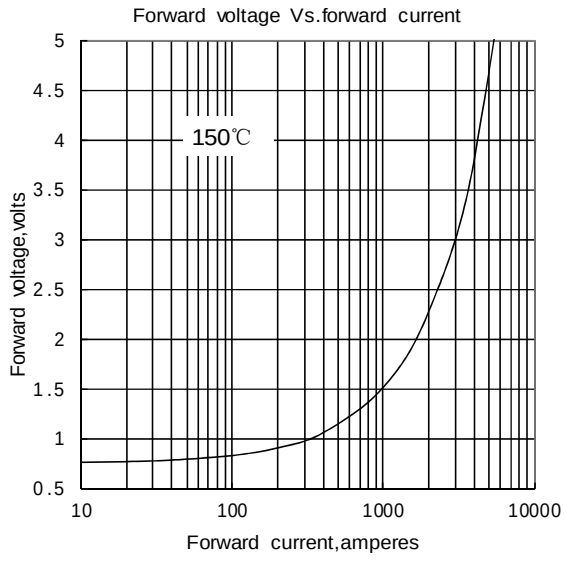

Fig.1

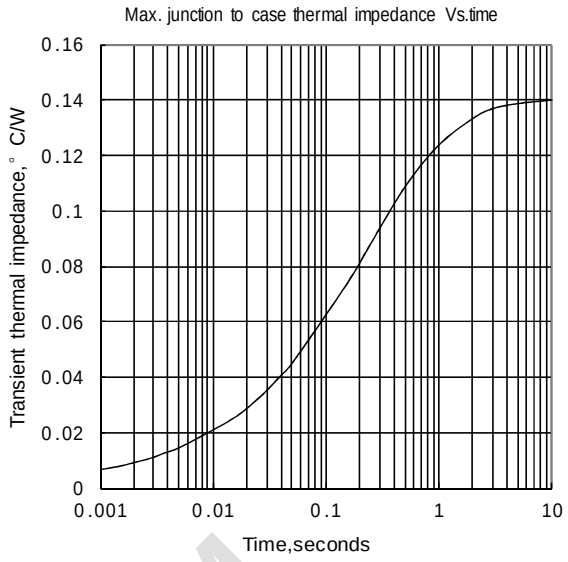

Fig.2

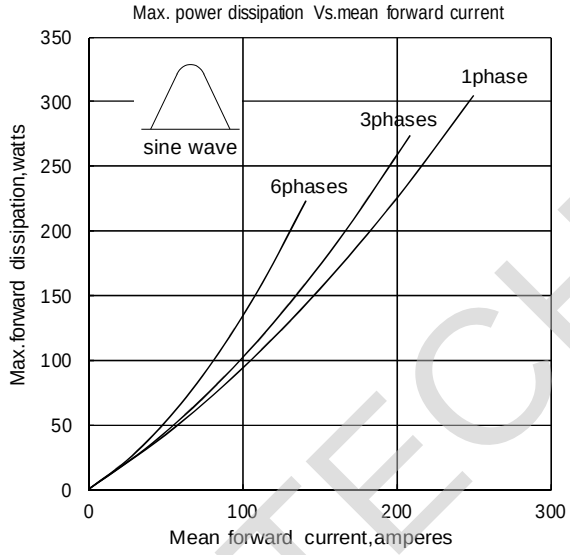

Fig.3

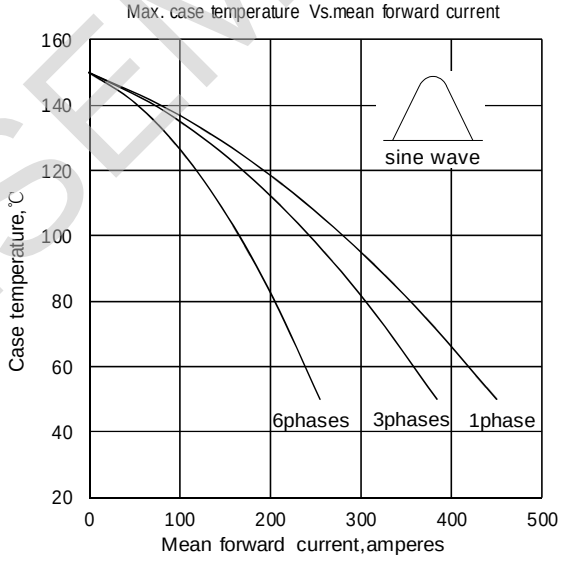

Fig.4

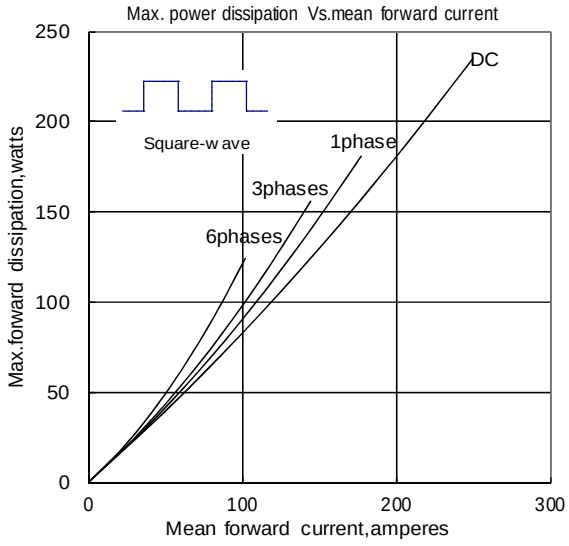

Fig.5

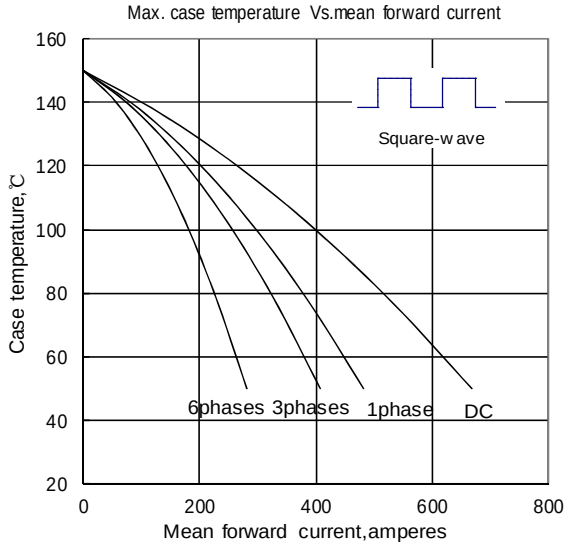

Fig.6

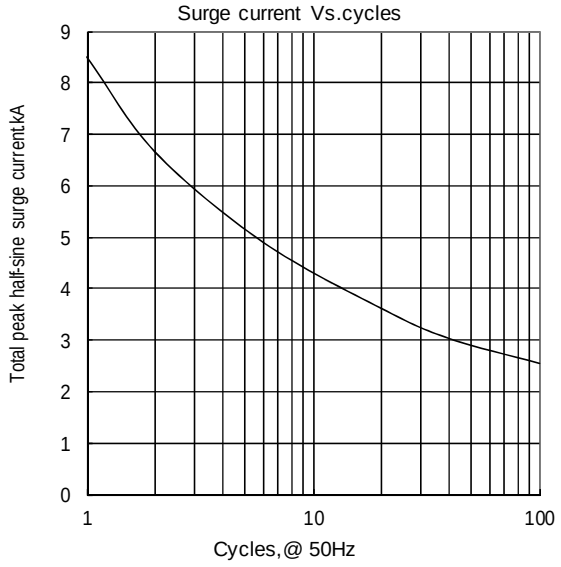

Fig.7

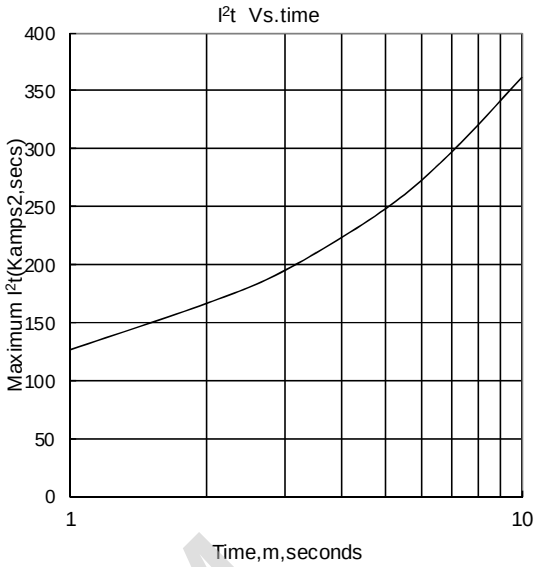

Fig.8

Outline:

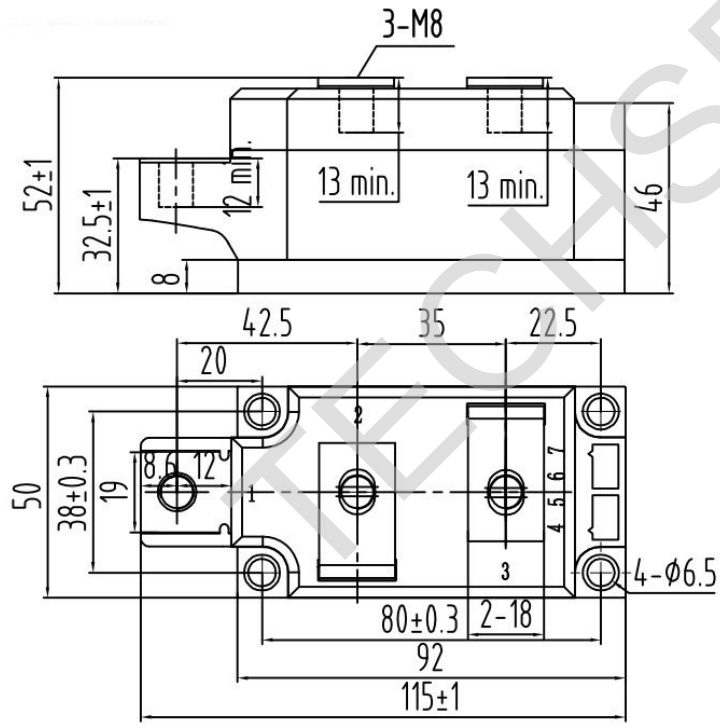

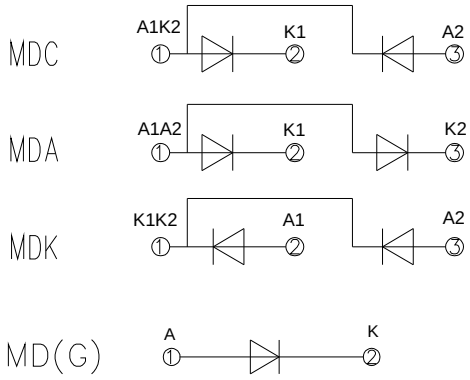

Unmarked dimensional tolerance：±0.5mm

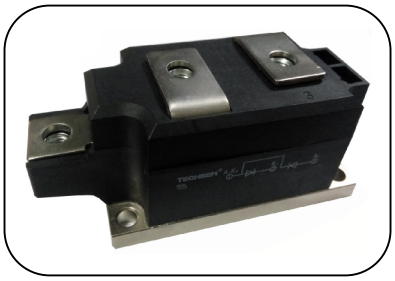

Features：

- Isolated mounting base 3000V~
- Pressure contact technology with Increased power cycling capability
- Space and weight saving

Typical Applications

- Various rectifiers
- DC supply for PWM inverter

V_{RRM}	Type & Outline
800V	MDx300-08-413F3D
1000V	MDx300-10-413F3D
1200V	MDx300-12-413F3D
1400V	MDx300-14-413F3D
1600V	MDx300-16-413F3D
1800V	MDx300-18-413F3D
1800V	MD300-18-413F3DG

MDx stands for any type of **MDC, MDA, MDK**

SYMBOL	CHARACTERISTIC	TEST CONDITIONS	T_j(°C)	VALUE			UNIT
				Min	Type	Max	
$I_{F(AV)}$	Mean forward current	180° half sine wave 50Hz Single side cooled, T_C=100°C	150			300	A
$I_{F(RMS)}$	RMS forward current					471	A
I_{RRM}	Repetitive peak current	at V_{RRM}	150			20	mA
I_{FSM}	Surge forward current	V_R=60%V_{RRM},t=10ms half sine,	150			9.1	kA
I^2t	I^2t for fusing coordination					414	10^3A^2s
V_{FO}	Threshold voltage		150			0.75	V
r_F	Forward slope resistance					0.55	mΩ
V_{FM}	Peak forward voltage	I_{FM}=900A	25			1.35	V
$R_{th(j-c)}$	Thermal resistance Junction to case	Single side cooled per chip				0.13	°C/W
$R_{th(c-h)}$	Thermal resistance case to heatsink	Single side cooled per chip				0.04	°C/W
V_{iso}	Isolation voltage	50Hz,R.M.S,t=1min,I_{iso}:1mA(MAX)		3000			V
F_m	Terminal connection torque(M8)			10		12	N·m
	Mounting torque(M6)			4.5		6	N·m
T_{vj}	Junction temperature			-40		150	°C
T_{stg}	Stored temperature			-40		125	°C
W_t	Weight				770		g
Outline	413F3D						

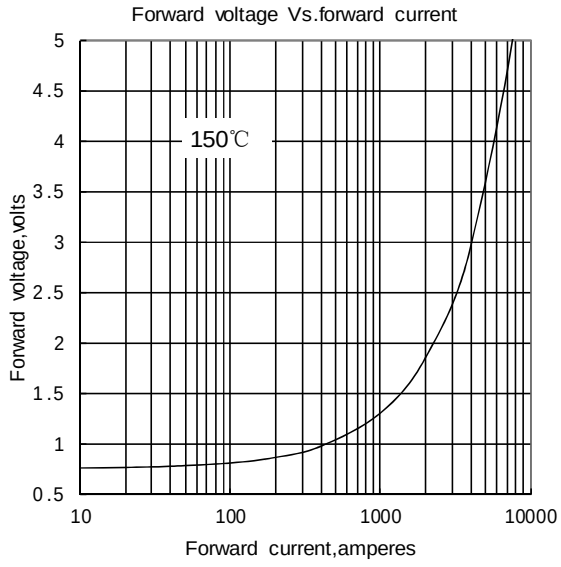

Fig.1

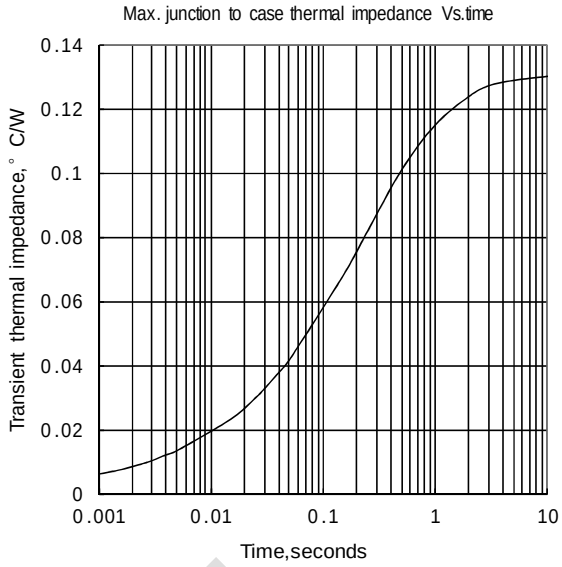

Fig.2

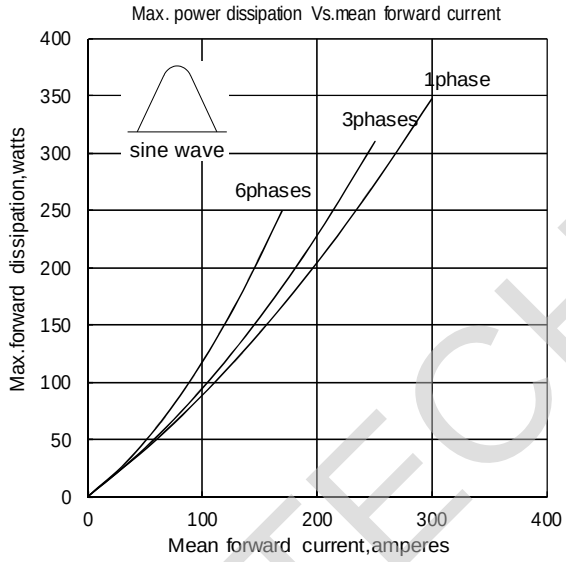

Fig.3

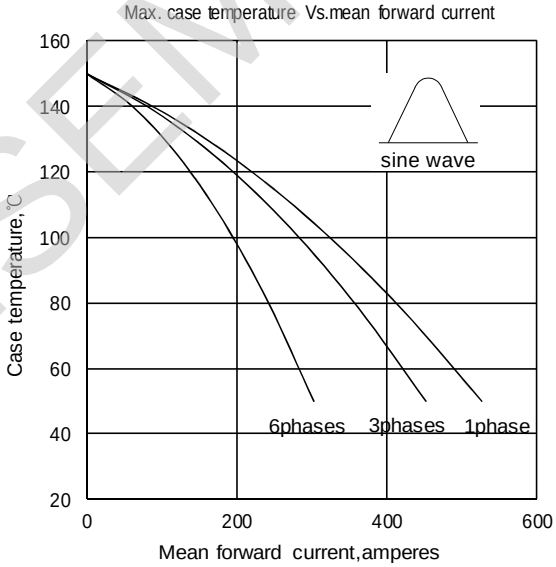

Fig.4

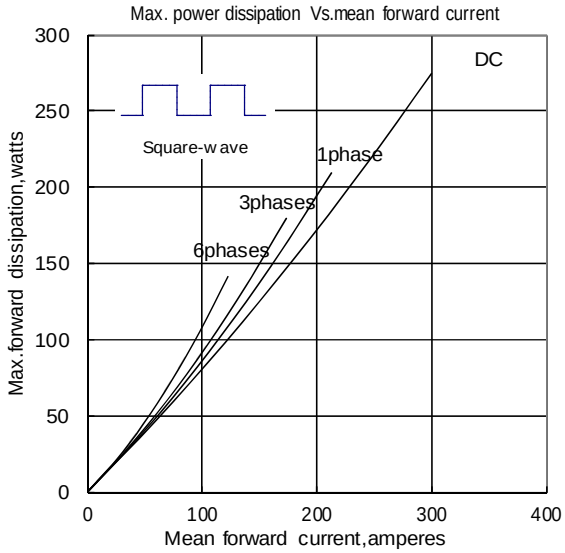

Fig.5

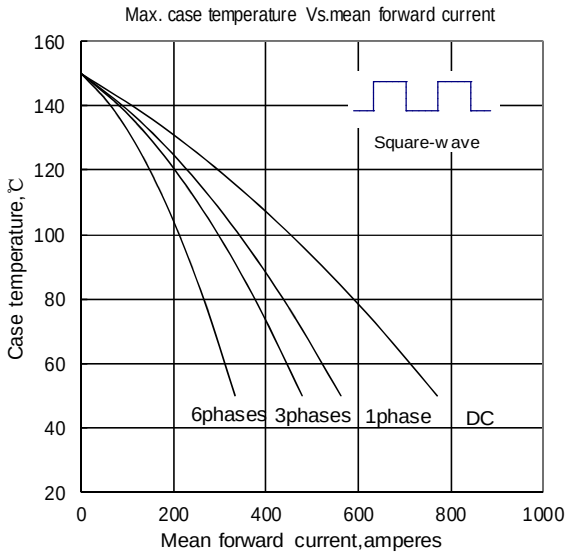

Fig.6

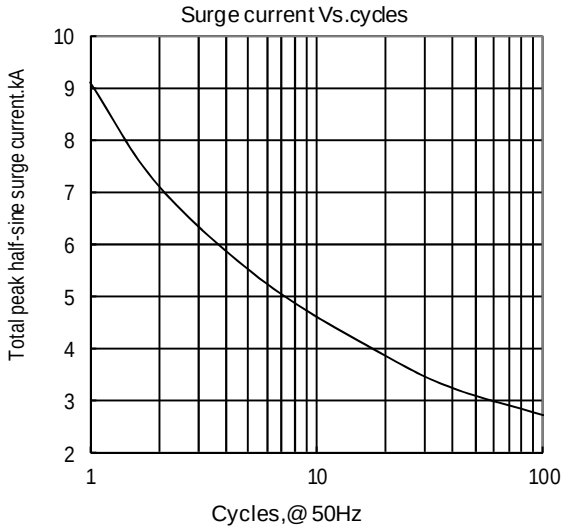

Fig.7

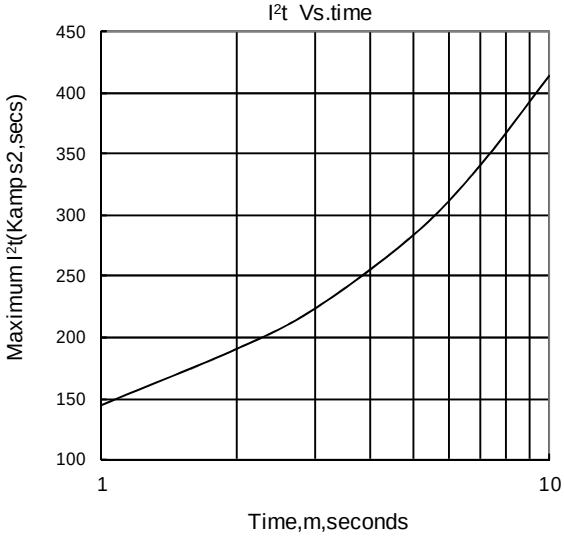

Fig.8

Outline:

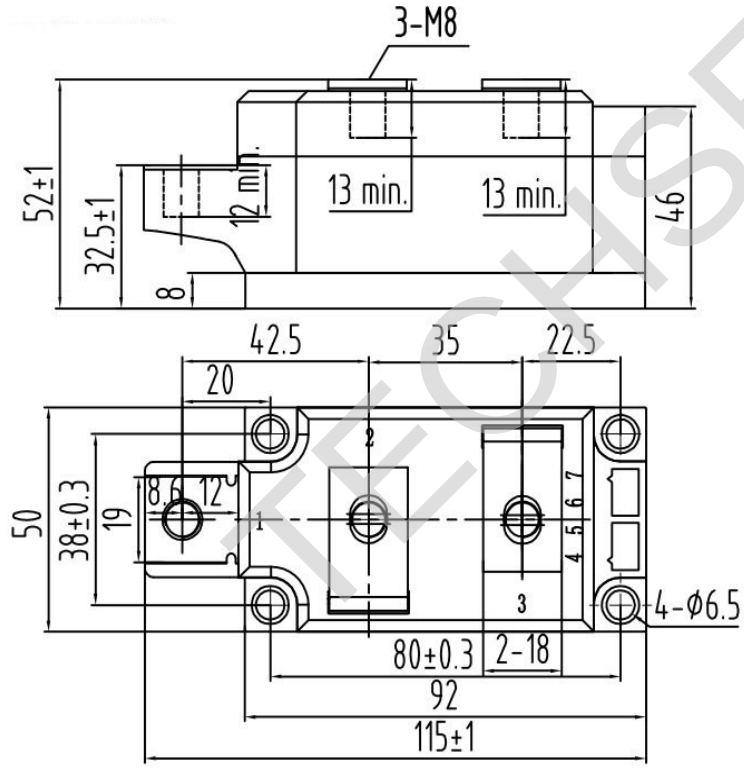

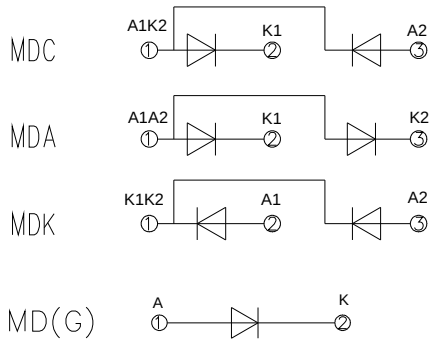

Unmarked dimensional tolerance：±0.5mm

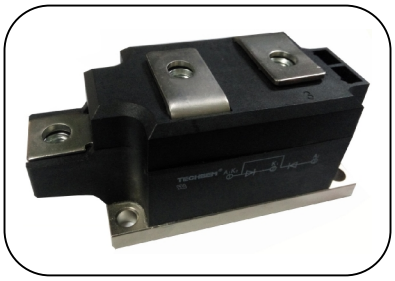

Features：

- Isolated mounting base 3000V~
- Pressure contact technology with Increased power cycling capability
- Space and weight saving

Typical Applications

- Various rectifiers
- DC supply for PWM inverter

V_{RRM}	Type & Outline
800V	MDx300-08-413F3D
1000V	MDx300-10-413F3D
1200V	MDx300-12-413F3D
1400V	MDx300-14-413F3D
1600V	MDx300-16-413F3D
1800V	MDx300-18-413F3D
1800V	MD300-18-413F3DG

MDx stands for any type of **MDC, MDA, MDK**

SYMBOL	CHARACTERISTIC	TEST CONDITIONS	T_j(°C)	VALUE			UNIT
				Min	Type	Max	
$I_{F(AV)}$	Mean forward current	180° half sine wave 50Hz Single side cooled, T_C=100°C	150			300	A
$I_{F(RMS)}$	RMS forward current					471	A
I_{RRM}	Repetitive peak current	at V_{RRM}	150			20	mA
I_{FSM}	Surge forward current	V_R=60%V_{RRM},t=10ms half sine,	150			9.1	kA
I^2t	I^2t for fusing coordination					414	10^3A^2s
V_{FO}	Threshold voltage		150			0.75	V
r_F	Forward slope resistance					0.55	mΩ
V_{FM}	Peak forward voltage	I_{FM}=900A	25			1.35	V
$R_{th(j-c)}$	Thermal resistance Junction to case	Single side cooled per chip				0.13	°C/W
$R_{th(c-h)}$	Thermal resistance case to heatsink	Single side cooled per chip				0.04	°C/W
V_{iso}	Isolation voltage	50Hz,R.M.S,t=1min,I_{iso}:1mA(MAX)		3000			V
F_m	Terminal connection torque(M8)			10		12	N·m
	Mounting torque(M6)			4.5		6	N·m
T_{vj}	Junction temperature			-40		150	°C
T_{stg}	Stored temperature			-40		125	°C
W_t	Weight				770		g
Outline	413F3D						

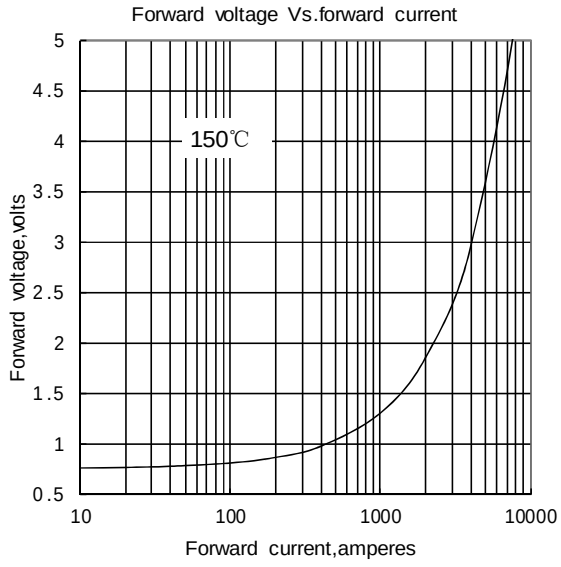

Fig.1

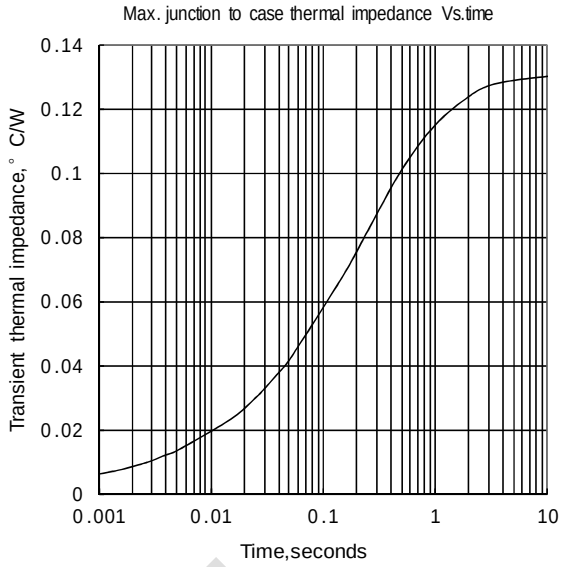

Fig.2

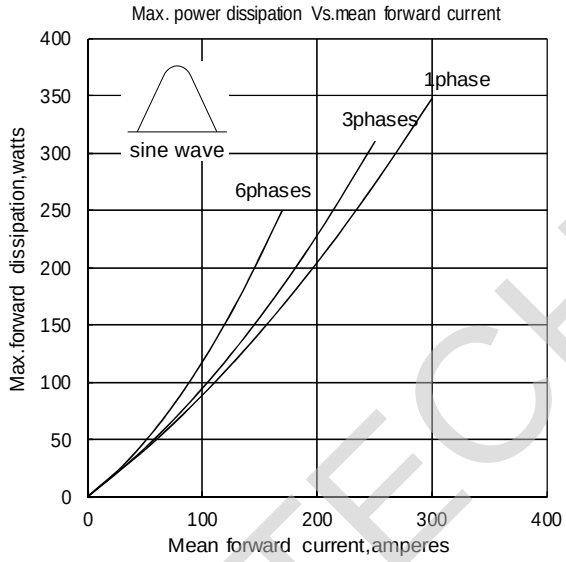

Fig.3

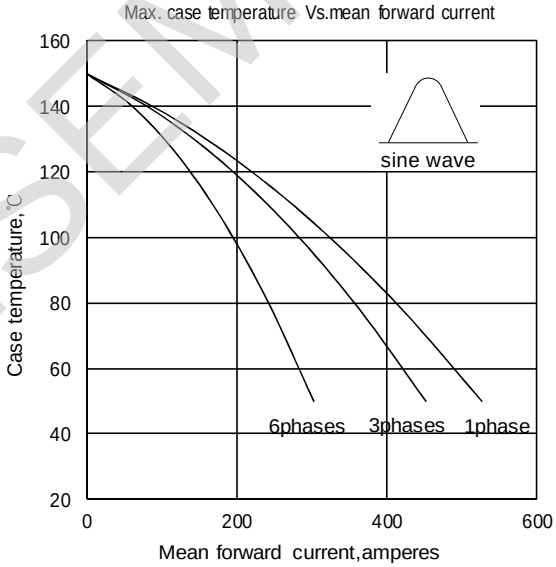

Fig.4

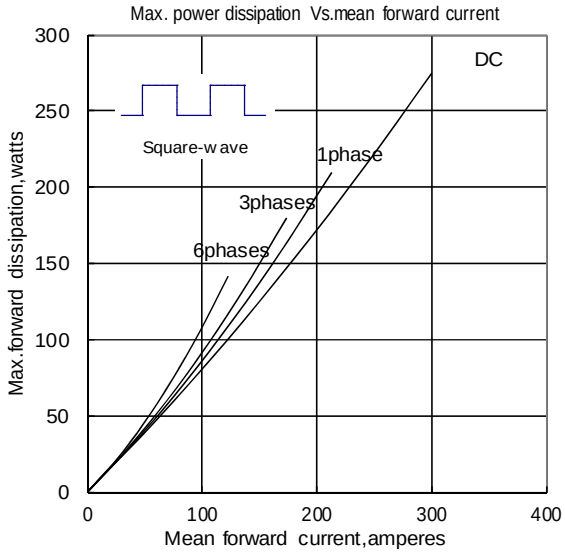

Fig.5

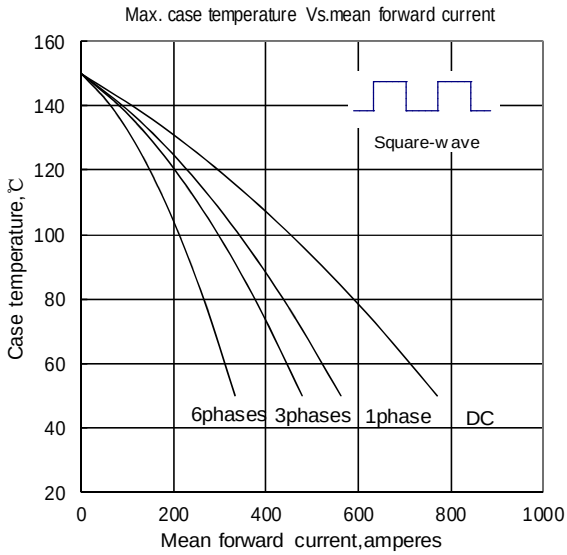

Fig.6

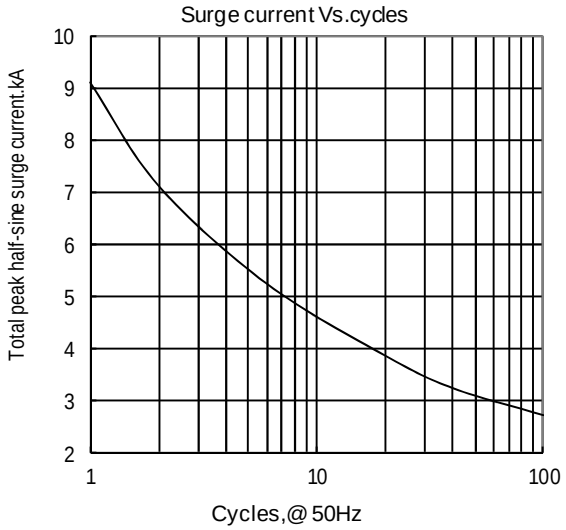

Fig.7

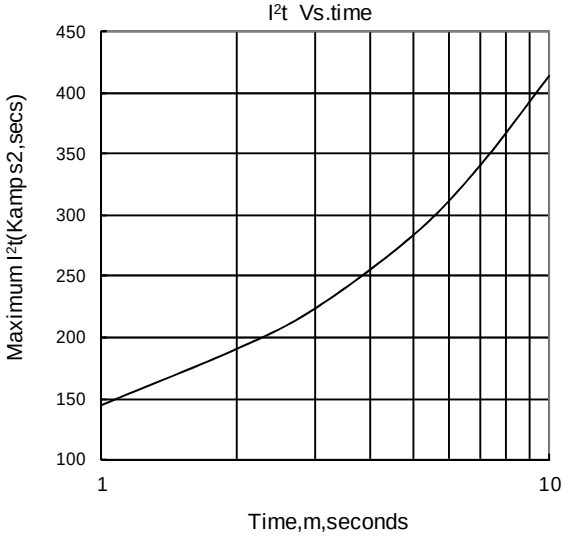

Fig.8

Outline:

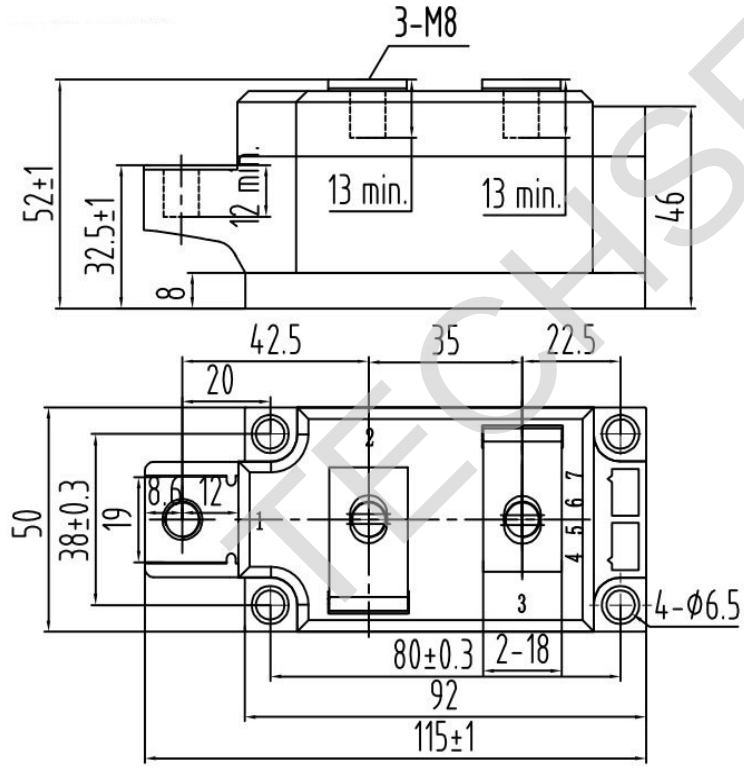

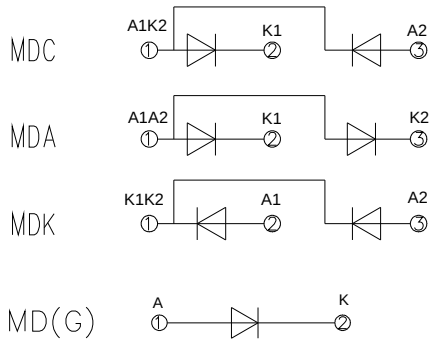

Unmarked dimensional tolerance：±0.5mm